Antiproton Experiment Ideas

Daniel M. Kaplan

ILLINOIS INSTITUTE OF TECHNOLOGY
Transforming Lives.Inventing the Future.www.iit.edu

Antiproton Physics Workshop
Fermilab
22 May 2010

Outline

- Physics opportunity
- A new experiment (one possibility)
- P-986
- Fermilab objections
- Summary

Physics Opportunity

- Thanks to competition w LHC, Fermilab Antiproton Source is world's most intense:

Table I: Antiproton Intensities at Existing and Future Facilities

Facility	**Stacking:**		**Clock Hours**	$\overline{\mathbf{p}}$**/Yr**
	Rate ($\mathbf{10^{10}}$**/hr**)	**Duty Factor**	**/Yr**	($\mathbf{10^{13}}$)
CERN AD			3800	0.4
FNAL (Accumulator)	20	15%	5550	17
FNAL (New Ring)	20	90%	5550	100
FAIR (≥2016)	3.5	90%	2780	9

...even after FAIR@Darmstadt turns on

- Could support dedicated expts after Tevatron ends

➡ world's best charm, charmonium & hyperon studies

Physics Opportunity

Assume $\mathcal{L} \approx 2 \times 10^{32}$ cm^{-2} s^{-1} (10 × E835):

- Charm: total cross section ~1 μb? → ~10^{10} events/y?
- Hyperons: 1 mb inclusive → ~10^{12} events/y
  60 nb $\Omega\bar{\Omega}$ (est.) → ~10^{8} events/y
- Charmonium (& X3872): form 10,000s of non-1^{--} events with unique energy & mass precision

- Note: *dozens* of thesis topics!

➡ easiest way for Fermilab program to maintain some breadth after Tevatron

Breadth of Program

- *Partial* list of potential papers & thesis topics:

General	
1	Particle multiplicities in medium-energy pbar-p collisions
2	Particle multiplicities in medium-energy pbar-N collisions
3	Total cross section for medium-energy pbar-p collisions
4	Total cross section for medium-energy pbar-N collisions
Charm	
5	Production of charm in medium-energy pbar-p collisions
6	Production of charm in medium-energy pbar-N collisions
7	A-dependence of charm production in medium-energy pbar-N collisions
8	Associated production of charm baryons in medium-energy pbar-N collisions
9	Production of charm baryon-antibaryon pairs in medium-energy pbar-N collisions
10	Measurement of D0 mixing in medium-energy pbar-N collisions
11	Search for/Observation of CP violation in D0 mixing
12	Search for/Observation of CP violation in D0 decays
13	Search for/Observation of CP violation in charged-D decays
Hyperons	
14	Production of Lambda hyperons in medium-energy pbar-p collisions
15	Production of Sigma0 in medium-energy pbar-p collisions
16	Production of Sigma- in medium-energy pbar-p collisions
17	Production of Xi- in medium-energy pbar-p collisions
18	Production of Xi0 in medium-energy pbar-p collisions

19	Production of Omega- in medium-energy pbar-p collisions
20	Production of Lambda Lambdabar pairs in medium-energy pbar-p collisions
21	Production of Sigma+ Sigmabar- pairs in medium-energy pbar-p collisions
22	Production of Xi- Xibar+ pairs in medium-energy pbar-p collisions
23	Production of Omega- Omegabar+ pairs in medium-energy pbar-p collisions
24	Rare decays of Sigma+
25	Rare decays of Xi-
26	Rare decays of Xi0
27	Rare decays of Omega-
28	Search for/Observation of CP violation in Omega- decay
Charmonium	
29	Production of X(3872) in medium-energy pbar-p collisions
30	Precision measurement of X(3872) mass, lineshape, and width
31	Decay modes of X(3872)
32	Limits on rare decays of X(3872)
33	Production of other XYZ states in medium-energy pbar-p collisions
34	Precision measurement of the eta_c mass, line shape and width
35	Precision measurement of the h_c mass, line shape and width
36	Precision measurement of the eta_c' mass, line shape and width
37	Complementary scans of J/psi and psi'
38	Precise determination of the chi_c COG
39	Production of J/psi and Chi_cJ in association with pseudoscalar meson(s)

- We believe health of U.S. HEP *needs* such breadth (used to be a given at Fermilab)

Charmonium Rate Estimates

Keith Gollwitzer, FNAL

State	J	M(MeV)	B(pbarp ->cbarc)	Production Cross Section (nb)	Final State	Expected Observed Events per Day*
eta_c	0	2980	1.3x10^-3	1200	gamma gamma phi-phi (4K)	775 900
J/psi	1	3096	2.2x10^-3	5300	e+e-	650,000
chi_0	0	3415	2.2x10^-4	134	J/psi(e+e-) gamma gamma gamma pi0 pi0 phi-phi (4K)	200 85 1,300 30
chi_1	1	3511	6.7x10^-5	111	J/psi(e+e-) gamma	6,000
h_c†	1	3525	5x10^-5	80	gamma eta_c(gamma gamma) gamma eta_c(phi-phi)	15 20
chi_2	2	3556	6.6x10^-5	176	J/psi(e+e-) gamma gamma gamma pi0 pi0 phi-phi (4K)	5,800 100 500 90
eta_c(2S)†	0	3637	1.6x10^-4	80	gamma gamma phi-phi (4K)	50 60
psi(2S)	1	3686	2.6x10^-4	380	e+e- J/psi (e+e-) anything	8,000 47,800
X†	1	3872	4x10^-5	50	J/psi (e+e-) anything = 0.1%	100

(based on plausible assumptions)

* neglecting $(\Delta p/p)_{\text{beam}}$ † $\bar{p}p$ width "best guess" used

A Possible Approach

One possibility:

- Once Tevatron shuts down (≈2011),
  - Reinstall E760 EM spectrometer
  - Add small magnetic spectrometer
  - Add precision TOF system
  - Add wire or pellet target
  - and fast DAQ system

[existing SciFi DAQ from D0]

≈$4M

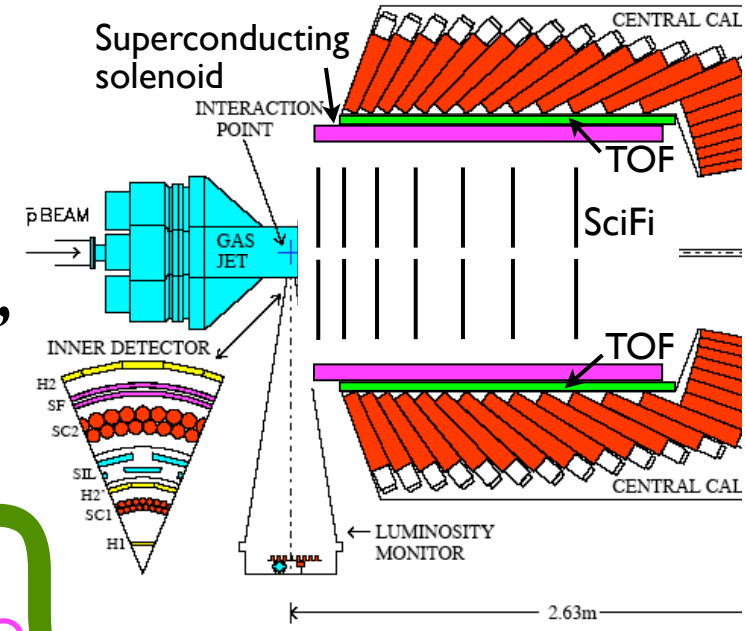

- Virtues: get "on the air" quickly
- Otherwise, hard to start major experiment for this physics now!

BESS Solenoid

- Available; fits in E760/835 calorimeter

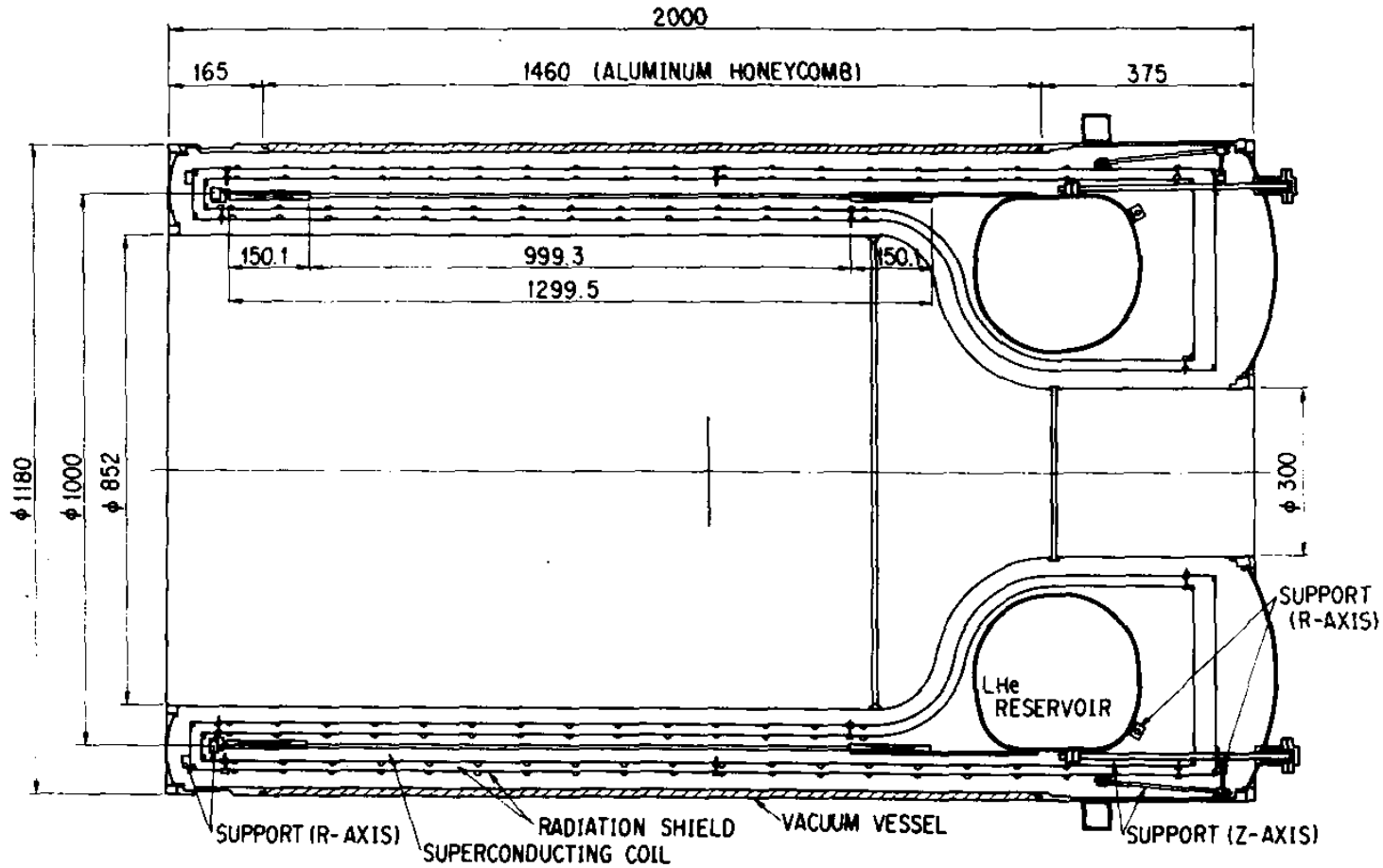

- Only 0.2 X_0 thick

E760 Calorimeter

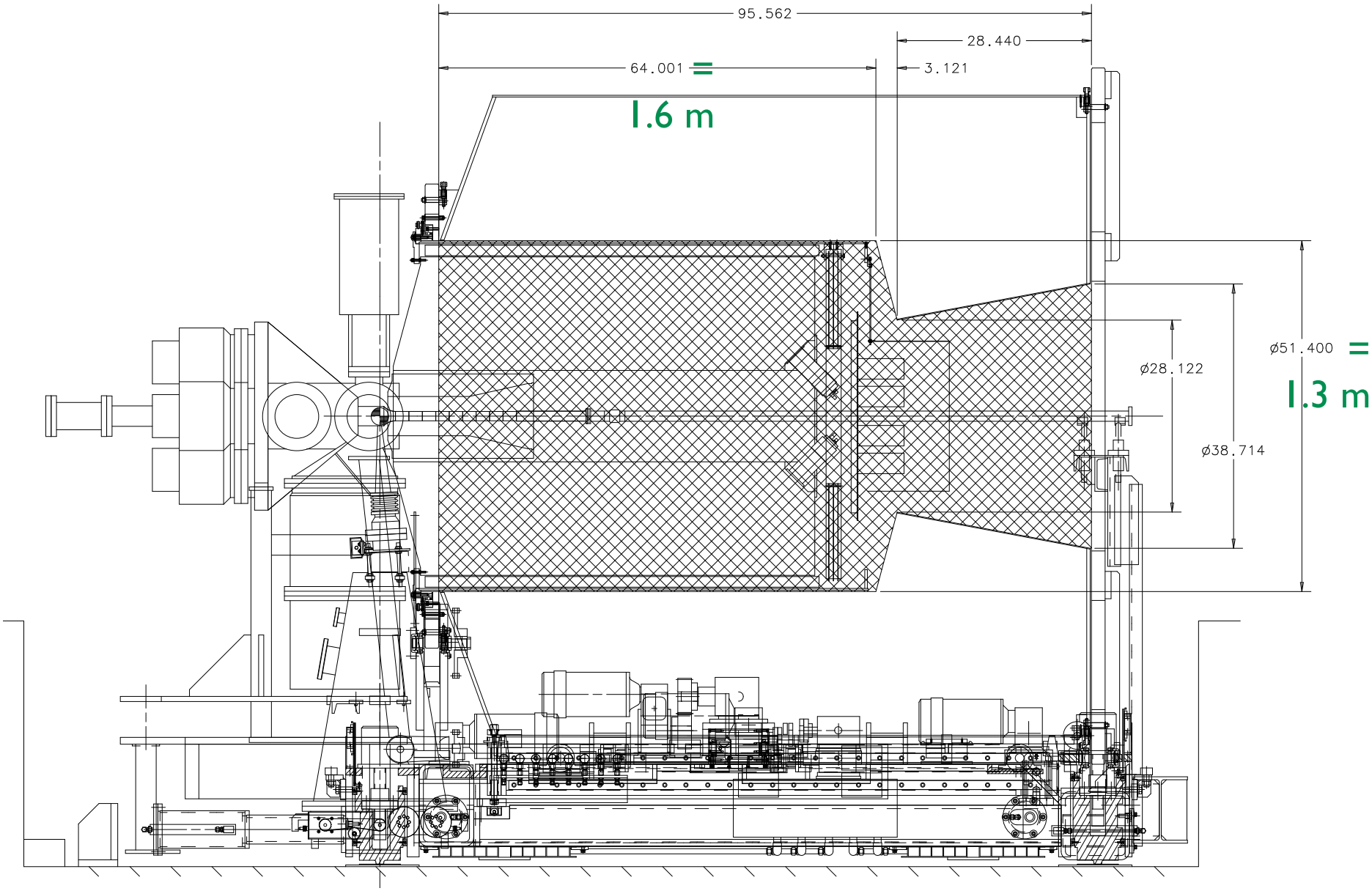

E760 Calorimeter

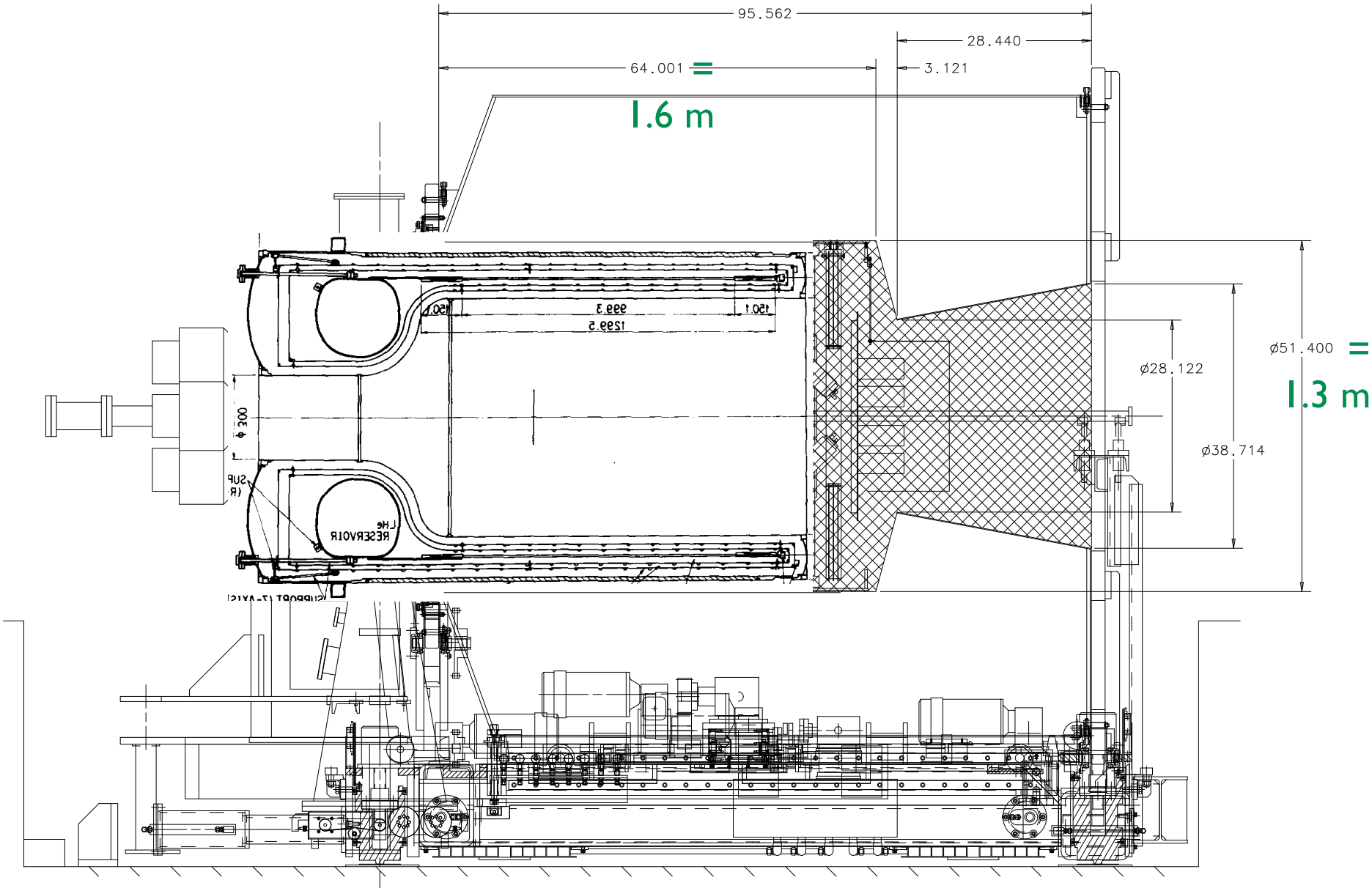

Return Yoke Study

Chuck Brown, FNAL

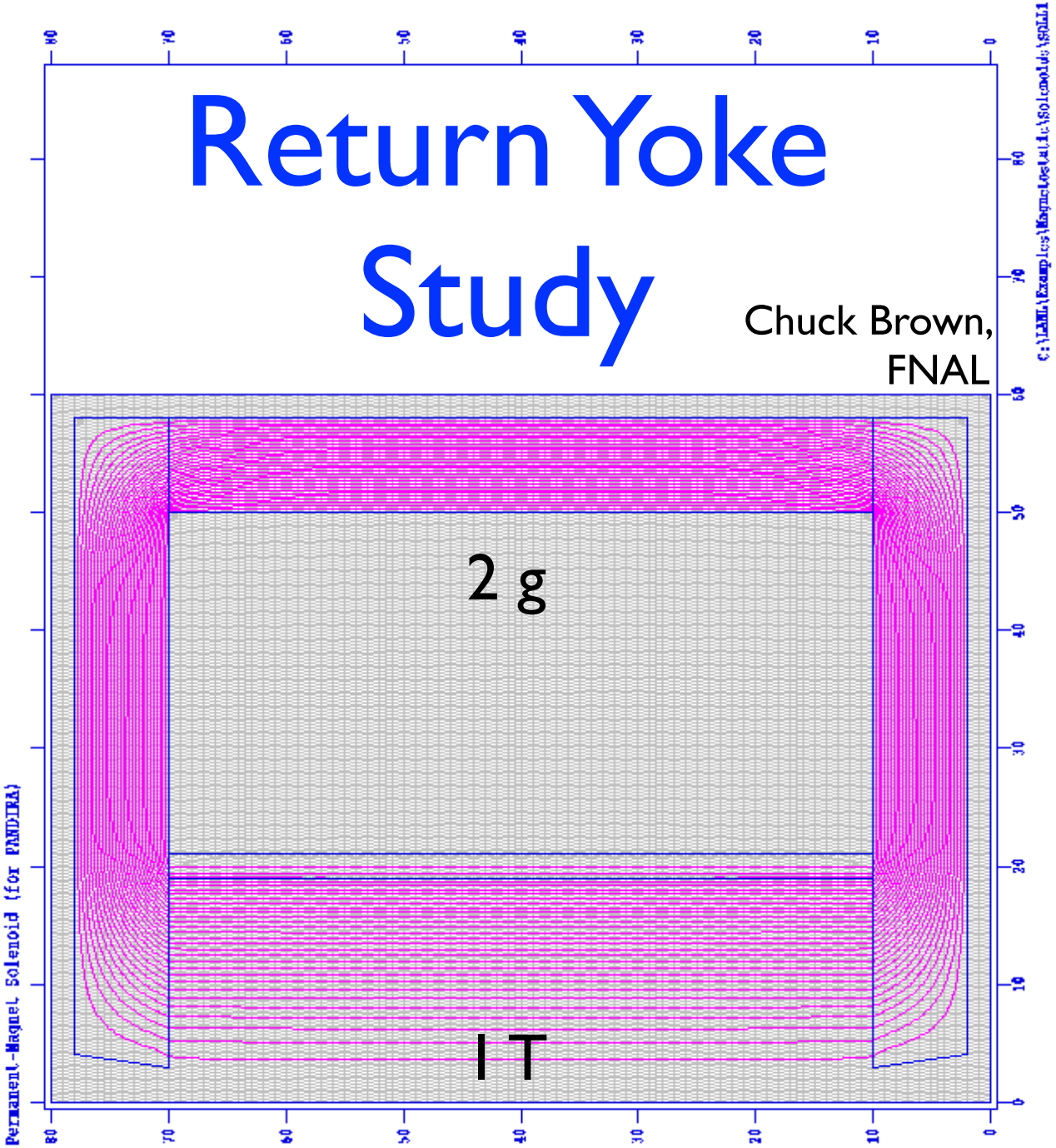

Target Ideas

- E760/835 used H_2 cluster jet
  - essential for small energy spread (Fermi motion, dE/dx)
  - hard to fit within magnet & return yoke?
- Charm benefits from small, high-A target (say, 30 μm Ti wire → $A^{0.29} \approx \times 3$ in cross section)
- $\overline{\text{P}}$ANDA H_2 cluster jet R&D
- Frozen-H_2 target? (Jackson, Ishimoto)
- Aim for compatibility with all

Frozen-H_2 Target?

Shigeru Ishimoto, Shoji Suzuki KEK;
Isao Tanihata; RCNP
and Daniel Kaplan; IIT

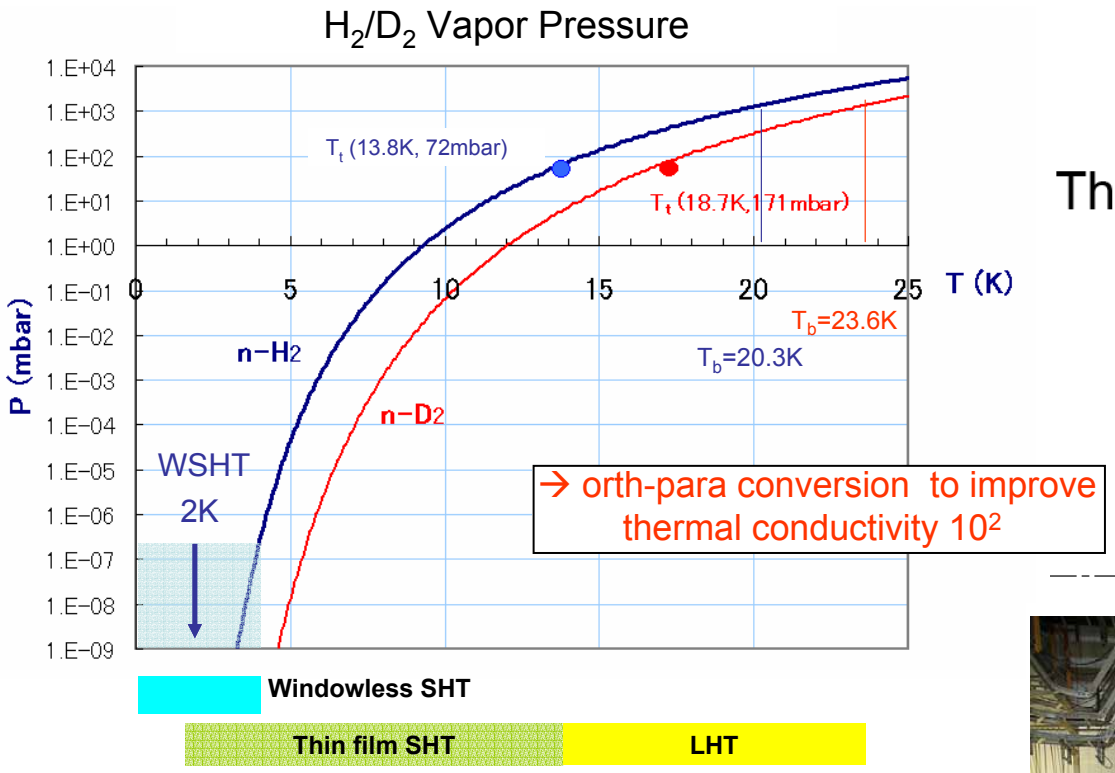

→ orth-para conversion to improve thermal conductivity 10^2

Diffuser Made from 20 μm Sintered S-S Powder

Pure-Silver Foil t=30 μm and Copper Block

Thin-WSHT at KEK for TRIUMF

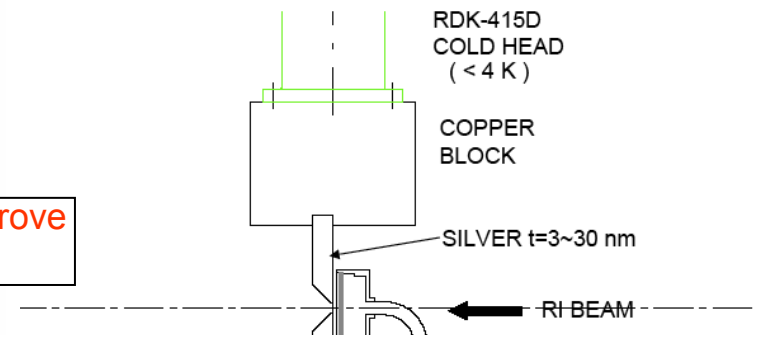

Epoxy Adhesive

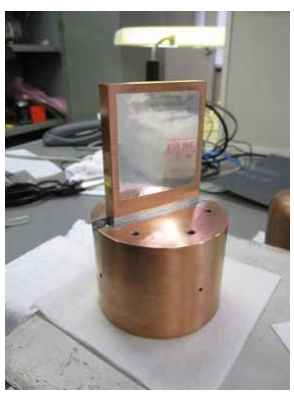

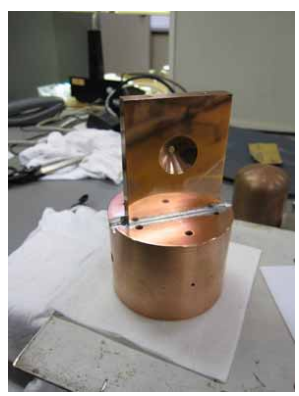

Frozen-H_2 Target?

Shigeru Ishimoto, Shoji Suzuki KEK;
Isao Tanihata; RCNP
and Daniel Kaplan; IIT

- Stick-type WSHT:

  Gas Blowing of Para Hydrogen

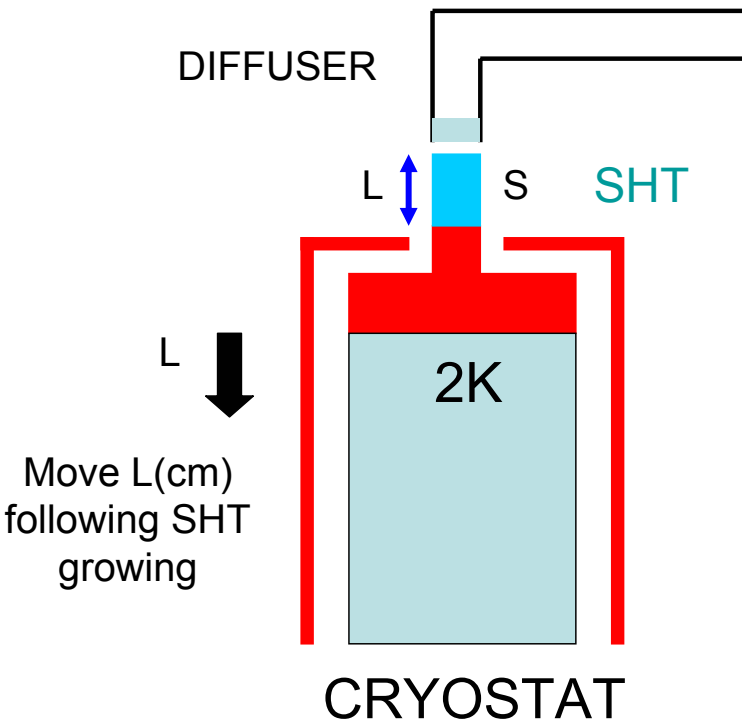

Stick-type WSHT in Storage Ring

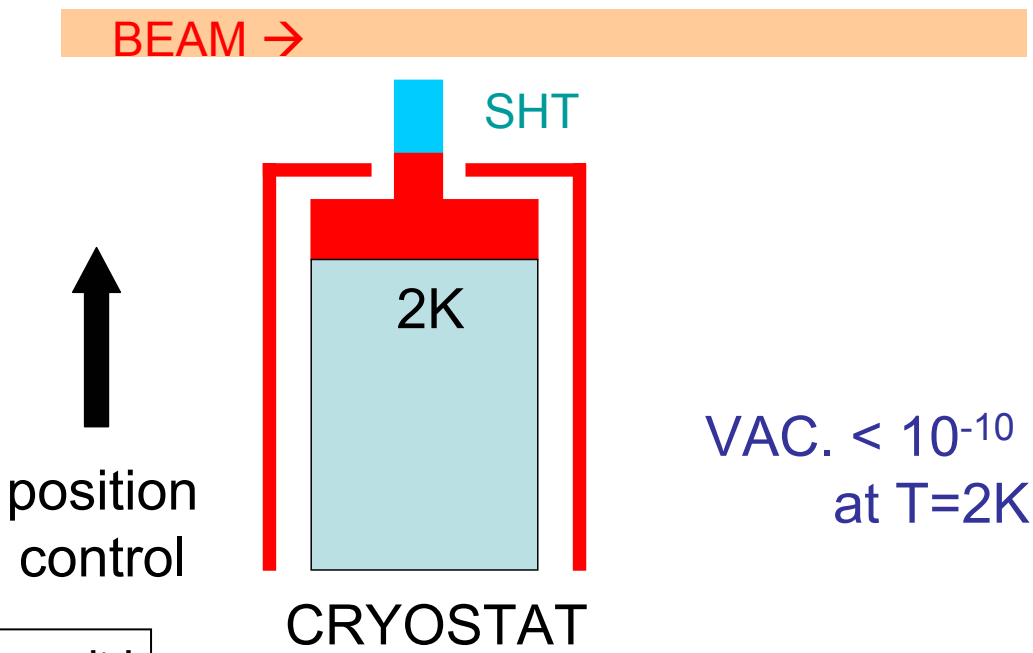

VAC. < 10^{-10} mbar
at T=2K

See also S. Ishimoto *et al.*, "Windowless solid hydrogen target," NIM A 480 (2002) 304.

P-986 Letter of Intent:

Medium-Energy Antiproton Physics at Fermilab

David M. Asner
Carleton University, Ottowa, ON, Canada K1S 5B6

Thomas J. Phillips
Duke University, Durham, N. Carolina 27708 USA

Giorgio Apollinari, Daniel R. Broemmelsiek, Charles N. Brown, David C. Christian, Paul Derwent, Keith Gollwitzer, Alan Hahn, Vaia Papadimitriou, Ray Stefanski, Steven Werkema, Herman B. White
Fermilab, Batavia, IL 60510, USA

Wander Baldini, Giulio Stancari, Michelle Stancari
INFN, Sezione di Ferrara, Ferrara, Italy

Gerald P. Jackson
Hbar Technologies, LLC, West Chicago, IL 60185, USA

Daniel M. Kaplan,* Yagmur Torun, Christopher G. White
Illinois Institute of Technology, Chicago, Illinois 60616, USA

HyangKyu Park
KyungPook National University, DaeGu, Korea

Todd K. Pedlar
Luther College, Decorah, IA 52101, USA

H. Richard Gustafson
University of Michigan, Ann Arbor, MI 48109, USA

Jerome Rosen
Northwestern University, Evanston, IL 60208, USA

Mitchell Wayne
Notre Dame University, Notre Dame, IN 46556, USA

Alak Chakravorty
St. Xavier University, Chicago, IL 60655, USA

E. Craig Dukes
University of Virginia, Charlottesville, Virginia 22903, USA

- Submitted to March '09 PAC mtg
- PAC questions answered for June '09 PAC mtg
- Upshot: physics interesting but no Fermilab effort can be provided at this time

Oddone Objections

1. Physics case weak?
   - Not according to PAC members I've asked
2. Proton "economics"?
   - P-986 needs only 2.5% of MI protons
3. Too expensive to mount?
   - Reuse of existing equipment → cost only ≈$4M ≤ NSF MRI limit
4. Incompatible with g–2?
   - g–2 can be mounted at CDF Assembly Hall at similar cost
5. Collaboration too weak?
   - One reason for this workshop!
6. Too expensive to run?
   - Only ≈2M$/y (≈15 FTEs)

Summary

- Best experiment ever on hyperons, charm, and charmonia may soon be feasible at Fermilab
  - including world's most sensitive charm CPV study
  - and unique studies of charmonium and hyperons
- pbar Source offers simplest way for Fermilab to have broad program in post-Tevatron era

➡ You can help! Want to join?

(See http://capp.iit.edu/hep/pbar/)

BACKUP...

Charm!

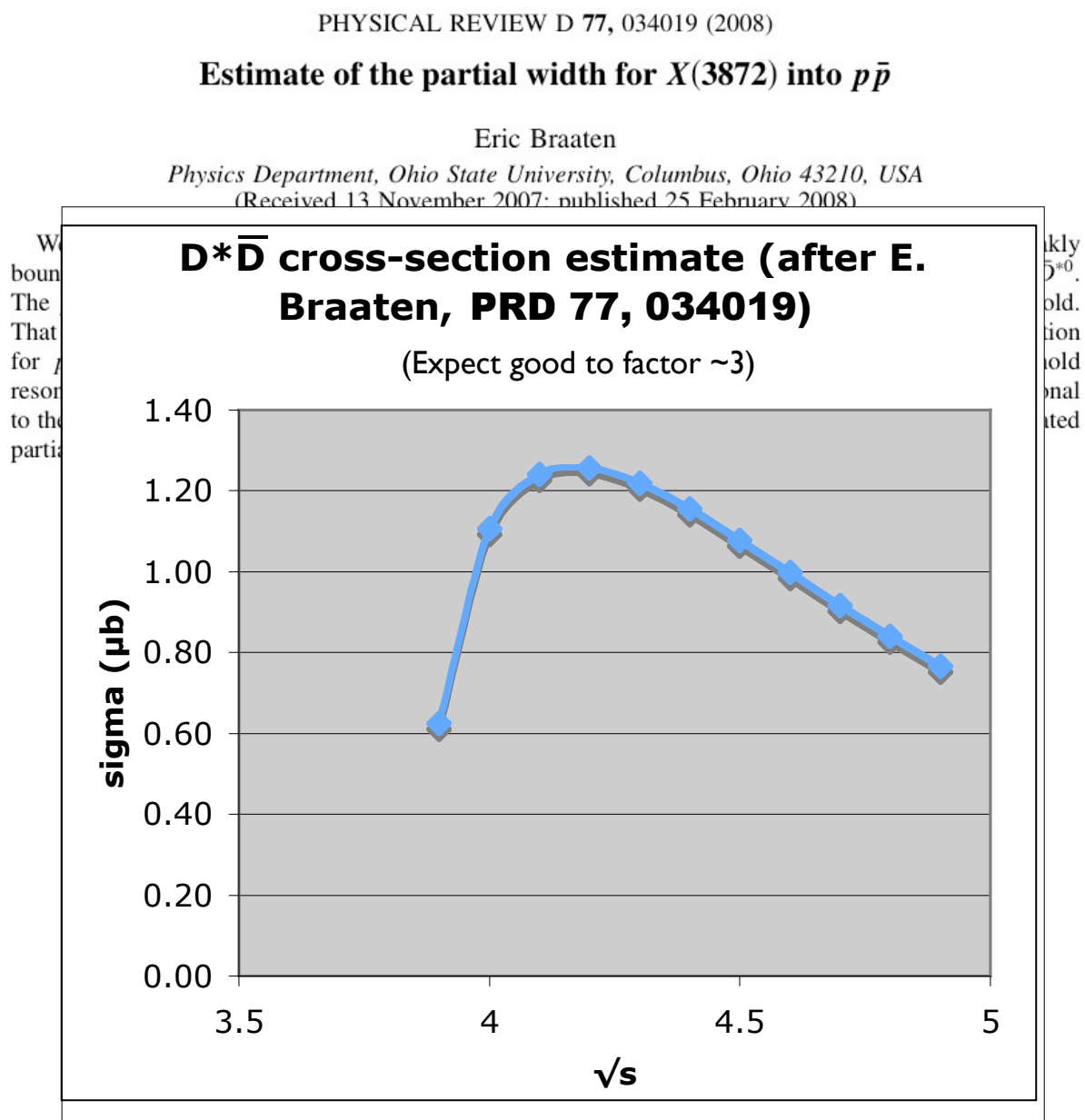

- E. Braaten estimate of $\bar{p}p$ $X(3872)$ coupling assuming X is D^*D molecule
  - extrapolates from K^*K data
- By-product is $D^{*0}\bar{D}^0$ cross section
- 1.3 μb → 5 ×10^9/year
- Expect efficiency as at B factories

Charm!

- *What's so exciting about charm?*

▶ D^0's mix! (c is only up-type quark that can)

Singly Cabibbo-supressed (CS) *D* decays have 2 competing diagrams:

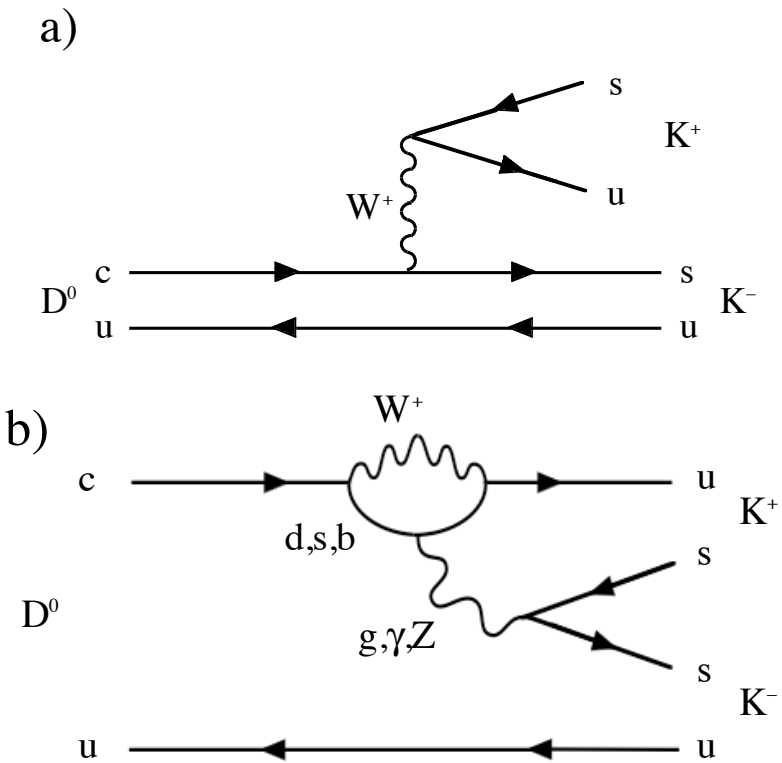

- *Big question:*
  New Physics or old?

➡ key is CP Violation!

- *B* factories have ~10^9 open-charm events
- $\bar{p}p$ can produce ~10^{10}/y

➡ world's best sensitivity to charm CPV

Charm!

- Ballpark sensitivity estimate based on Braaten formula and assuming $\sigma \propto A^{1.0}$:

Quantity	Value	Unit
Running time	2×10^7	s/y
Duty factor	0.8*	
$\mathcal{L}$	2×10^{32}	$\mathrm{cm}^{-2}\mathrm{s}^{-1}$
Target A (Al)	27	
$A^{0.29}$	2.6	(based on H.E. fixed-target)
$\sigma(\bar{p}p \to D^{*+}X)$	1.25	μb
# $D^{*\pm}$ produced	2.1×10^{10}	events/y
$\mathcal{B}(D^{*+} \to D^0\pi^+)$	0.677	
$\mathcal{B}(D^0 \to K^-\pi^+)$	0.0389	
Acceptance	0.5	(signal MC)
Efficiency	0.1	(MIPP & bkg MC)
Total	2.7×10^7	events/y

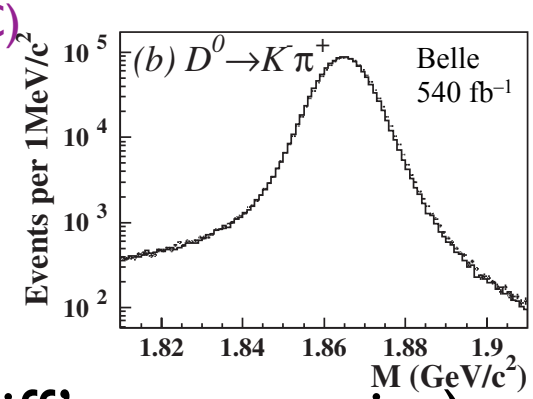

- Compare with 1.22 x 10^6 total tagged evts at Belle [M. Staric et al., PRL **98**, 211803 (2007)]

(LHC*b* will have comparable statistics but diff't systematics)

Background Study

- Have studied MIPP (FNAL E907) 20 GeV $\bar{p}p$ data:

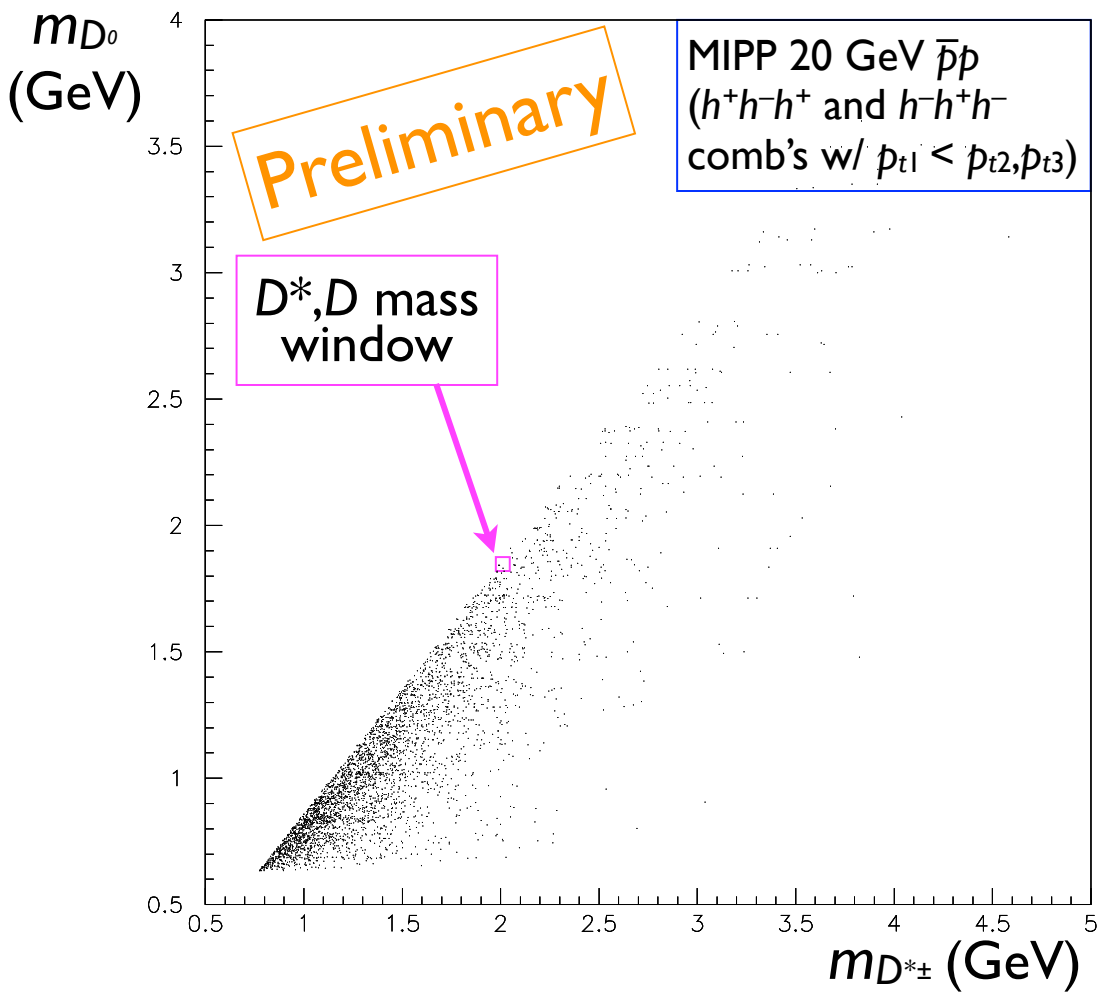

- Conclusion:

  Thanks to low multiplicity at 8 GeV, clean sample can likely be obtained with reasonable (~0.1) efficiency

pbar Charm Factory?

- Another possibility (E. Braaten): use the X (3872) as a pure source of $D^{*0}\overline{D}^{0}$ events
  - the $\overline{p}p$ equivalent of the ψ(3770)!?
  - assuming *current* Antiproton Accumulator parameters ($\Delta p/p$) & Braaten estimate, produce ~10^8 events/year
  - comparable to BES-III statistics
  - could gain factor ~5 via AA e^- cooling?
- Proposed expt will establish feasibility & reach

Charm Study

P̄ANDA

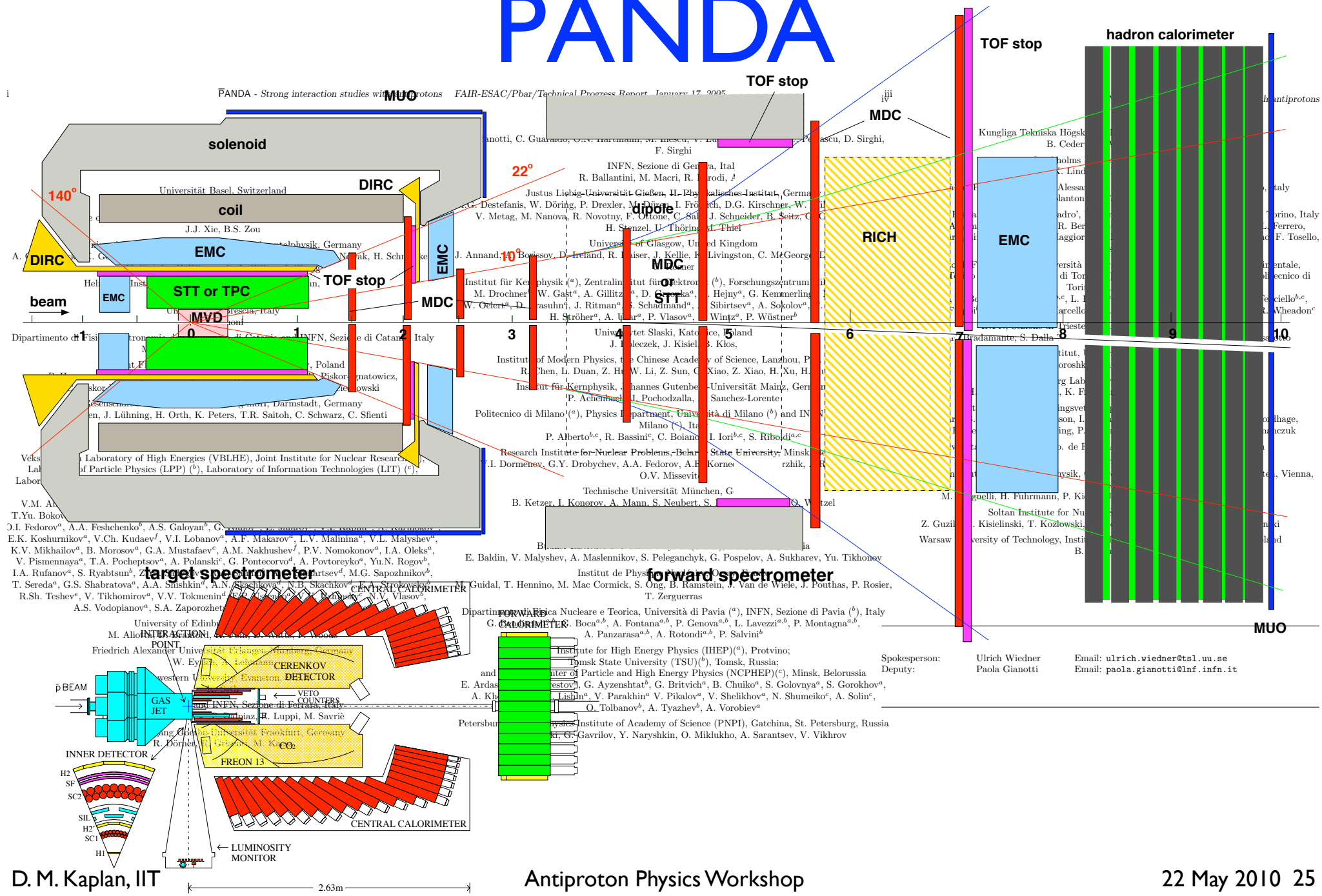

Spokesperson: Ulrich Wiedner Email: ulrich.wiedner@tsl.uu.se
Deputy: Paola Gianotti Email: paola.gianotti@lnf.infn.it

$\bar{\text{P}}$ANDA Physics Topics

- Charmonium ($c\bar{c}$) spectroscopy (mass, widths, branching ratios)
- Establishment of the QCD-predicted gluonic excitations (charmed hybrids, glueballs) in the 3–5 GeV/c^2 mass range
- Search for modifications of meson properties in the nuclear medium
- Precision γ-ray spectroscopy of single and double hypernuclei
- Extraction of generalized parton distributions from $\bar{p}p$ annihilation
- *D* meson decay spectroscopy (rare decays)
- Search for CP violation in the charm and strangeness sector